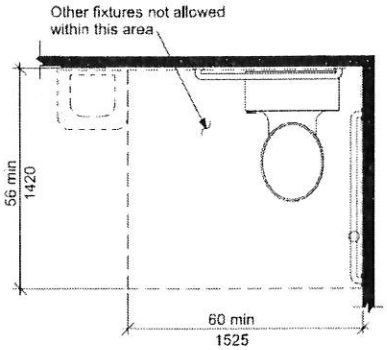

Fig. 604.3
Size of Clearance for Water Closet

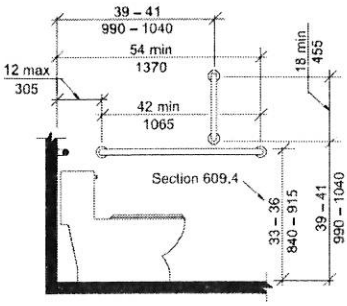

Fig. 604.5.1
Side Wall Grab Bar for Water Closet

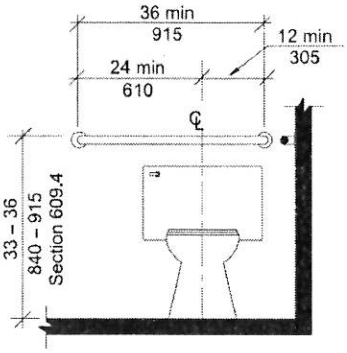

Fig. 604.5.2
Rear Wall Grab Bar for Water Closet

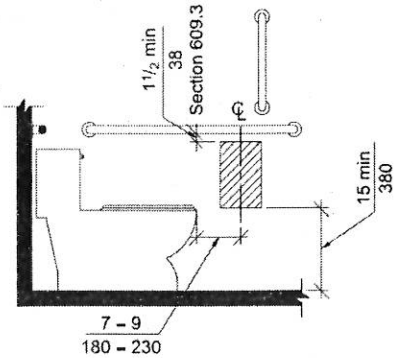

(a) Below Grab Bar

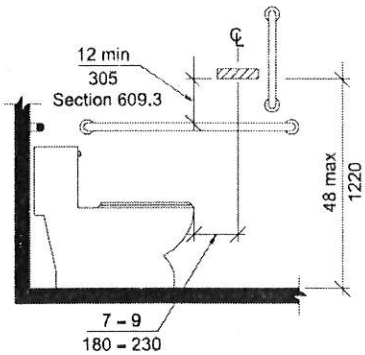

(b) Above Grab Bar

Fig. 604.7
Dispenser Location

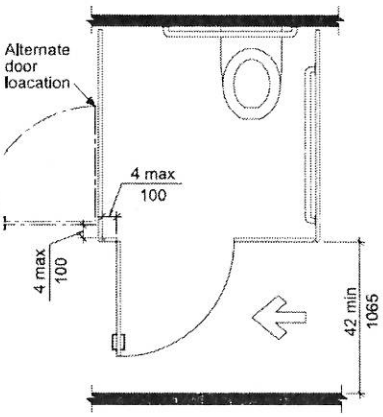

Fig. 604.8.3
Wheelchair Accessible Compartment Doors

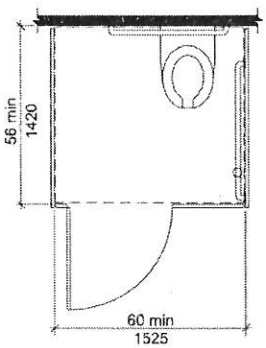

(a) Wall-Hung Water Closet – Adult

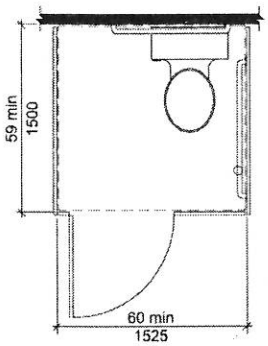

(b) Floor-Mounted Water Closet – Adult
Wall-Hung and
Floor-Mounted Water Closet – Children

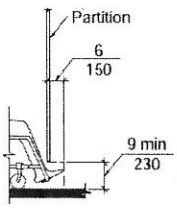

(a)
Elevation
Adult

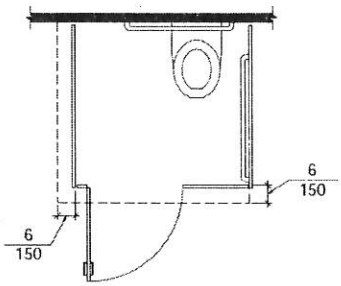

(c)
Plan

Fig. 604.8.5
Wheelchair Accessible Compartment Toe Clearance

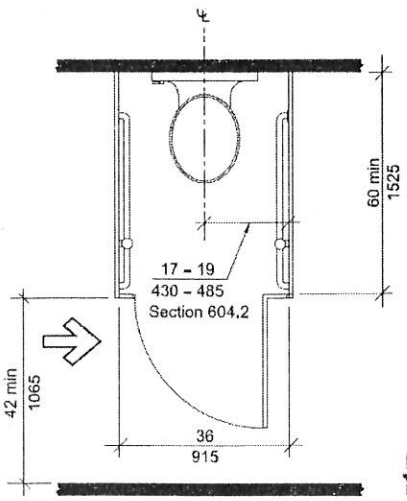

Fig. 604.9
Ambulatory Accessible Compartment

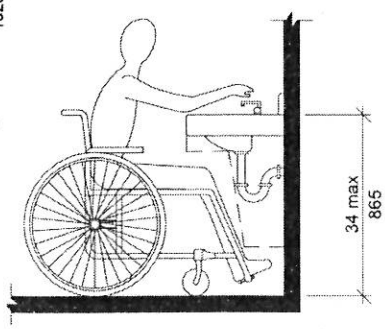

Fig. 606.3
Height of Lavatories and Sinks

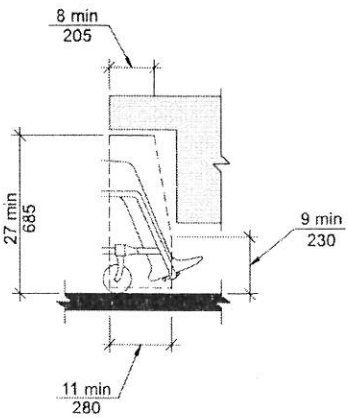

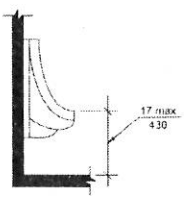

(a)
Wall Hung Type

Fig. 605.2